# Data Sheet

Article number: 203250M840A1X
Description: E+G levelling foot
GN 32-50-M8-40-A1-X
Note: X With female thread, External hexagon

## Measures

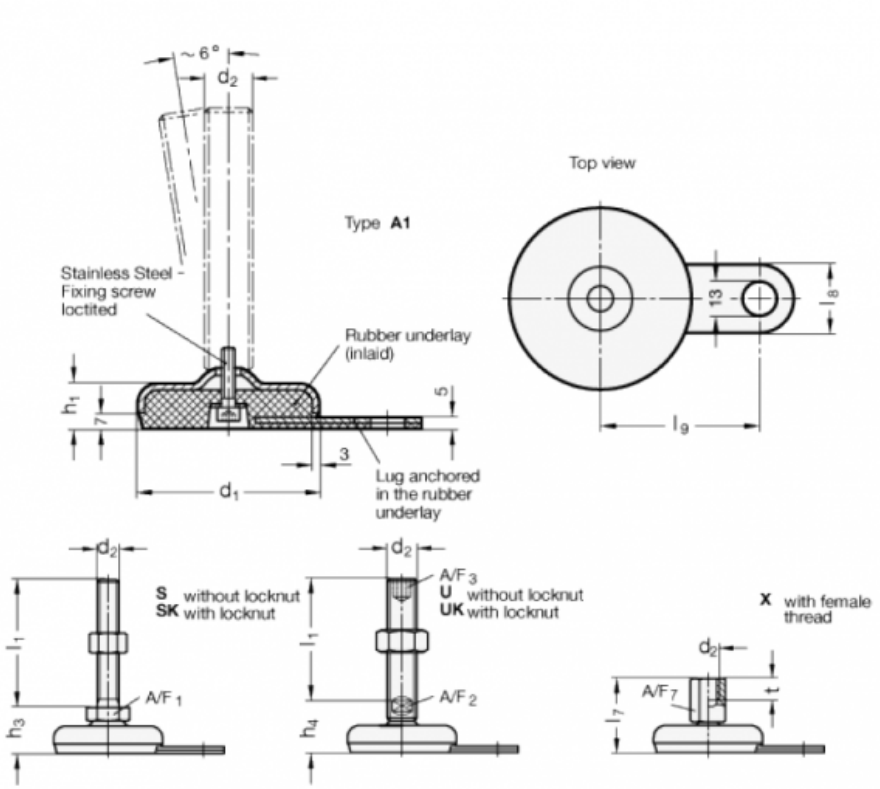


A/F7 = 14
d1 = 50
d2 = M8
h1 = 18
l7 = 40
l8 = 25
l9 = 45
t = 8

*Product drawings and brochures of any kind may contain errors for which Brd. Klee A/S cannot be liable.*